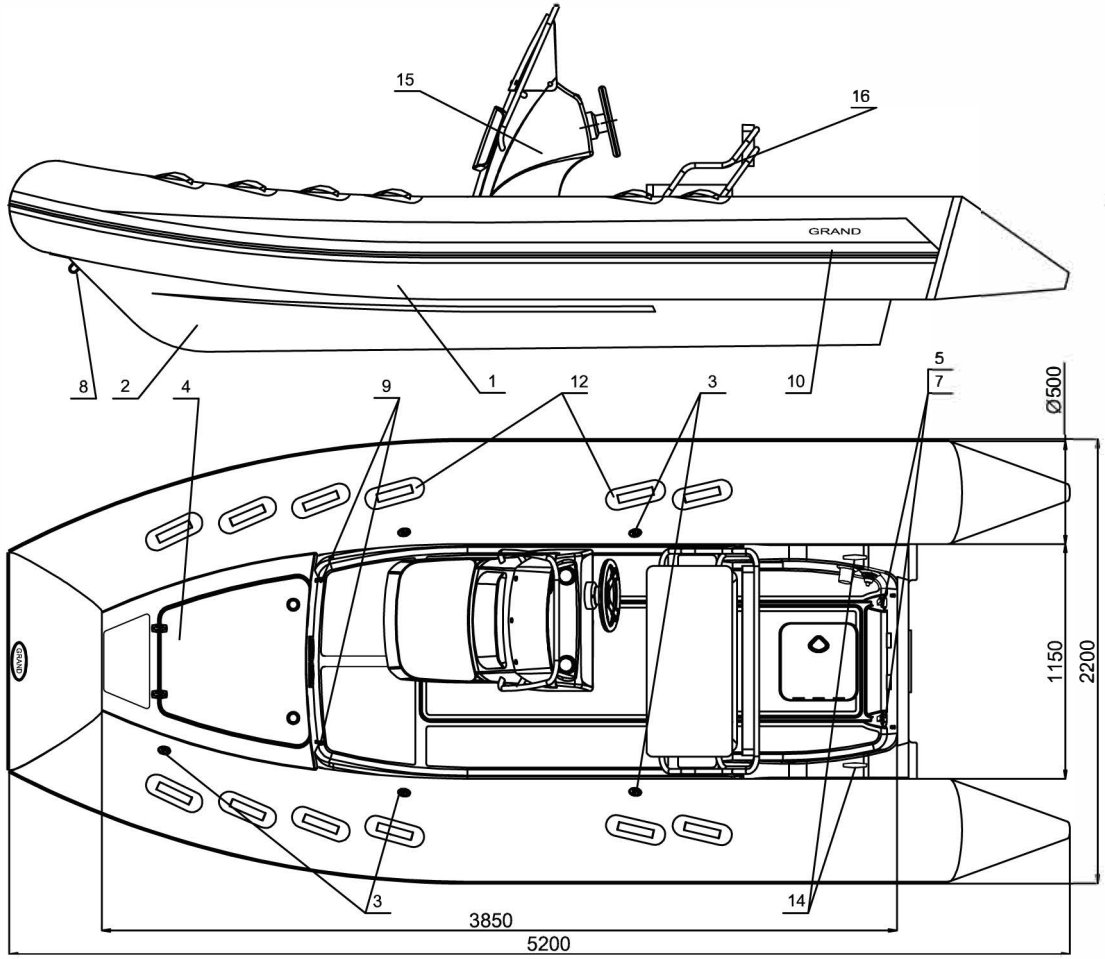

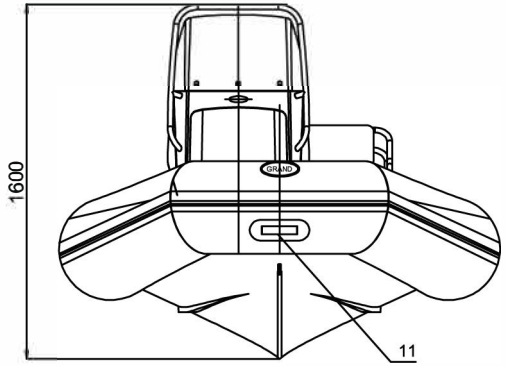

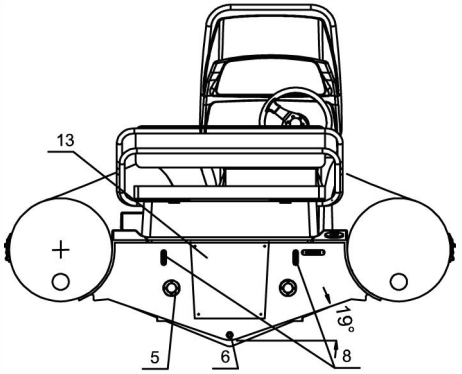

DIMENSION (cm)

Length overall	520
Length internal	385
Width overall	220
Width internal	115
Engine max (HP)	100
Engine recommended (HP)	70

CAPACITY

Passengers capacity	9
Max loading capacity (kg)	1000
Boat weight (kg)	285

TUBE

Tube diameter (cm)	50
No of chambers	5
Tube volume (m*3)	1,9

Zone	Item	Designation	Denomination	Q-ty	Remark
	1	4226	Inflatable tube for S520	1	
	2	4324	Fiberglass hull for S520	1	
	3	4139	Inflation-deflation valve BRAVO-2005	3	
	4	1050.01	Bow hatch S520	1	
	5	4447	Drain valve. 50mm	1	
	6		Drain through-hull with plug (brons. chrome)	1	
	7	4441	Expanded drain hlug 42mm	1	
	8	4401	U-bolt M10x120	3	
	9	71293	U-bolt M10x60	2	
	10	4264	Rubbing strake, 100 mm	1	10,6 m
	11	4250	PVC handle grey /grey insertion	1	
	12	425002	PVC handle grey /dark grey insertion	12	
	13	4424	Motor plate extremal N5	1	
	14	4461	Cleat (bronse.nikel plated, plastic base)	1	
	15	2220	Steering console CL-12	1	
	16	2302	Double seat SD-02 witn stowage and back	1	

UNLESS OTHERWISE SPECIFIED: DIMENSIONS ARE IN MILLIMETERS SURFACE FINISH: TOLERANCES: LINEAR: ANGULAR

FINISH:

DO NOT SCALE DRAWING

REVISION:

	NAME	SIGNATURE	DATE
DRAWN	Krugliyak		05.10.13
CHKD.	Urobyazko		
APPVD	Grebennikov		
MFG			
Q.A.			

MATERIAL

Silver Line S520L

1122

WEIGHT:

SCALE:1:1

SHEET 1 OF 1