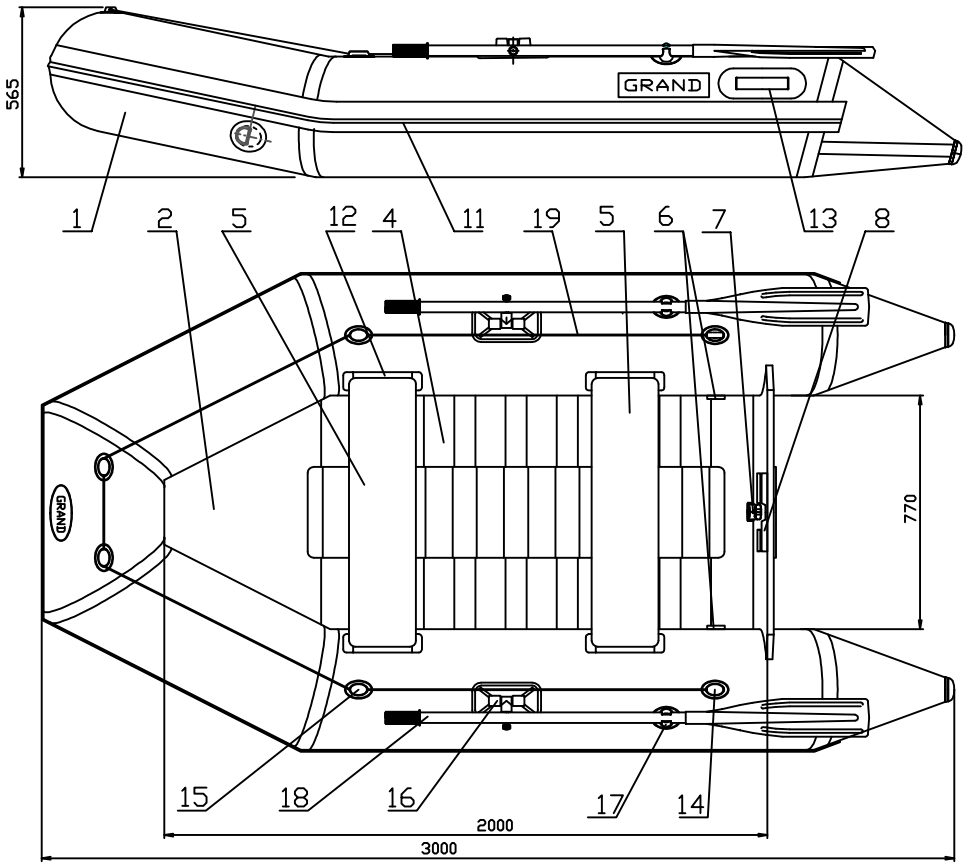

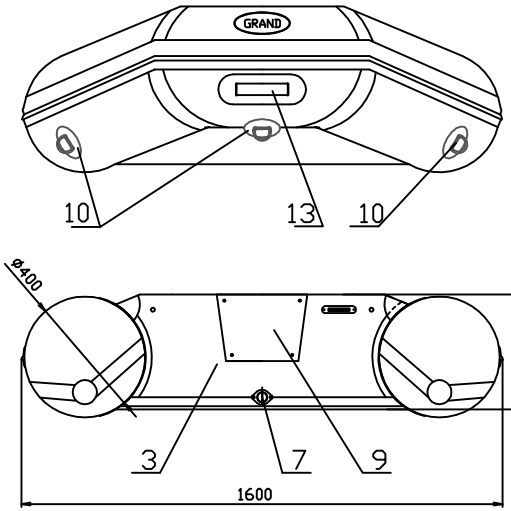

Item	Item No	Description	Q-ty	Note
1		Multi chamber buoyancy tube for E300	1	
2		Slatted deck bottom for E300	1	
3		Integral marine grade ply transom for E300	1	
4	4543	Slatted deck set for E300	1	
5	4507	Wooden seat №5 grey	2	
6	4139	Inflation-deflation valve BRAVO-2005	2	
7	4448	Pull up drain valve	1	
8	4410	Motor plate intermal 230x86	1	
9	4422	Motor plate extremal N3	1	
10	4259	Towing eye, PVC	3	
11	4264	Rubbing strake, 100 mm	1	6,6 m
12	4254	Wooden seat holder N1	4	
13	4250	PVC handle grey / grey insertion	1	
14	4257	Lifeline holder (end)	2	
15	4258	Lifeline holder (middle)	4	
16	4262	Oarlock	2	
17	4256	Oar holder	2	
18	4102	Oar 160 cm with rivert	2	
19	4266	Lifeline, D 10mm	1	

PROPRIETARY AND CONFIDENTIAL
THE INFORMATION CONTAINED IN THIS DRAWING IS THE SOLE PROPERTY OF GRAND MARINE CORPORATION. ANY REPRODUCTION IN PART OR AS A WHOLE WITHOUT THE WRITTEN PERMISSION OF GRAND MARINE CORPORATION IS PROHIBITED.

UNLESS OTHERWISE SPECIFIED: DIMENSIONS ARE IN MILLIMETERS
SURFACE FINISH:
TOLERANCES:
LINEAR:
ANGULAR:

FINISH:

DEBUR AND BREAK SHARP EDGES

DO NOT SCALE DRAWING

REVISION

	NAME	SIGNATURE	DATE
DRAWN	Borodin		
CHK'D	Drobyazko		
APPR'D	Grebennikov		
MFG			
Q.A			

MATERIAL:

WEIGHT:

Elf 300

1330

SCALE:1:1

SHEET 1 OF 1